CATHOLIC HIGH SCHOOL

END-OF-YEAR EXAMINATION (2025)

PRIMARY FIVE

MATHEMATICS

PAPER 1

(BOOKLET A)

Name : _____ ( )

Class : Primary 5_____

Date : 28 October 2025

Total time for Booklet A and B : 1 h 10 min

18 questions

26 marks

Parent's signature : _____

INSTRUCTIONS TO CANDIDATES

Do not turn over this page until you are told to do so.

Follow all instructions carefully.

Answer all questions.

Shade your answers in the Optical Answer Sheet (OAS) provided.

The use of calculators is **NOT** allowed.

This booklet consists of 9 printed pages and 1 blank page.

www.sgexams.com

www.sgexams.com

Questions **1** to **10** carry 1 mark each. Questions **11** to **18** carry 2 marks each. For each question, four options are given. One of them is the correct answer. Make your choice (1, 2, 3 or 4). Shade the oval (1, 2, 3 or 4) on the Optical Answer Sheet. All diagrams are not drawn to scale. (26 marks)

1. Which of the following is six million, eight hundred and five thousand and fourteen in numerals?

(1) 6 805 014

(2) 6 805 040

(3) 6 850 014

(4) 6 850 040

2. Round 28 513 to the nearest thousand.

(1) 20 000

(2) 28 000

(3) 29 000

(4) 30 000

3. In the number line, what is the value represented by A?

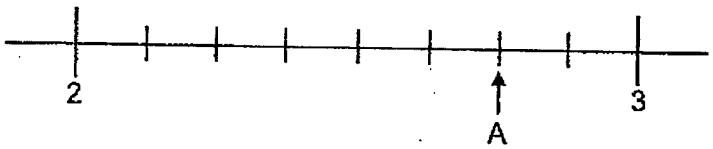

(1) $2\frac{1}{4}$

(2) $2\frac{3}{4}$

(3) $2\frac{3}{5}$

(4) $2\frac{7}{9}$

4. Find the value of 40 x 52

(1) 208

(2) 280

(3) 2018

(4) 2080

---

5. ABCD is a rectangle. E is a point on line AB. F is a point on line CD. Which is the height of triangle EBF when EB is the base of triangle EBF?

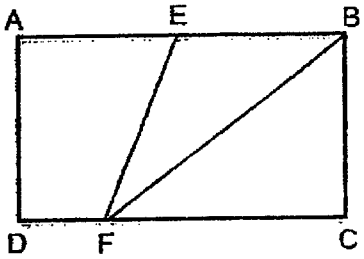

(1) AD

(2) BF

(3) CF

(4) EF

---

6. Which of the following is closest to 1?

(1) $\frac{2}{3}$

(2) $\frac{6}{7}$

(3) $\frac{3}{4}$

(4) $\frac{4}{5}$

---

www.sgexams.com

7. Express 0.8 as a percentage.

(1) 0.008%

(2) 0.8%

(3) 8%

(4) 80%

---

8. The following solids are made up of identical cubes. Which solid has the greatest volume?

(1)

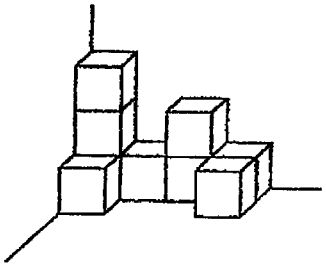

(2)

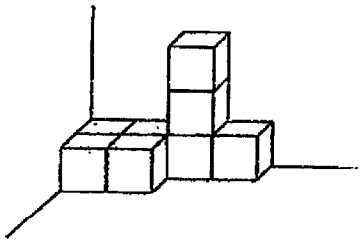

(3)

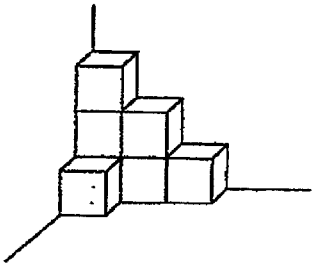

(4)

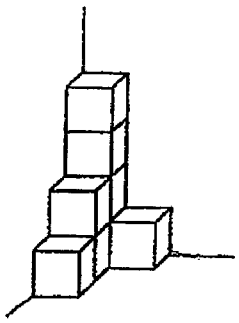

---

www.sgexams.com

9. A cuboid of height 13 cm has a square base of side 6 cm. What is the volume of the cuboid?

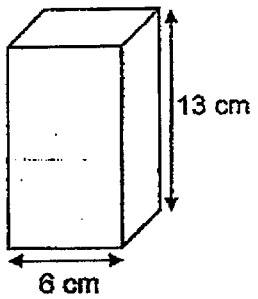

(1) 25 cm^3

(2) 78 cm^3

(3) 468 cm^3

(4) 1014 cm^3

---

10. The figure below is made up of 5 identical triangles. What percentage of the figure below is shaded?

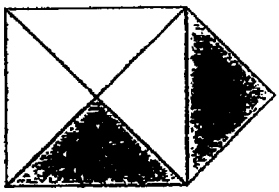

(1) 50%

(2) 20%

(3) 60%

(4) 40%

---

www.sgexams.com

11. Find the value of $70 - 50 \div (10 - 8) + 8$

(1) 18

(2) 2

(3) 37

(4) 53

---

12. A printer prints 150 pages in 5 minutes. At this rate, how many minutes will the same printer take to print 540 pages?

(1) 18

(2) 20

(3) 30

(4) 90

---

13. 40 children were asked to choose their favourite colour. Each child chose only 1 colour. The pie chart shows the children's choices.

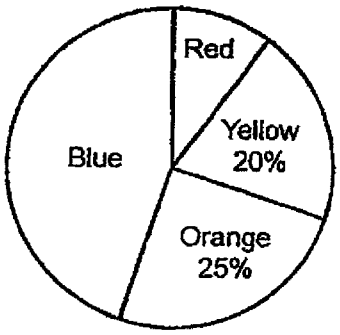

What was the total number of children who chose red colour and blue colour?

(1) 14

(2) 18

(3) 22

(4) 55

---

www.sgexams.com

14. A cubical tank of side 20 m is partially filled with water as shown. The height of the water level is 13 m.

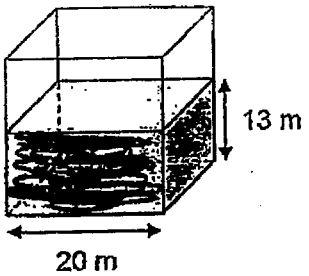

How much water is needed to fill the tank completely?

(1) 2800 m^3

(2) 4000 m^3

(3) 5200 m^3

(4) 8000 m^3

---

15. Mr Bala is 47 years old and his daughter is 23 years old now. How old was Mr Bala's daughter when he was 4 times as old as she was?

(1) 6

(2) 8

(3) 14

(4) 32

---

www.sgexams.com

16. $\frac{3}{5}$ of the balloons at a party are pink. $\frac{1}{4}$ of the remainder are blue and the rest are yellow. There are 160 balloons altogether. How many balloons are yellow?

(1) 16

(2) 24

(3) 48

(4) 96

---

17. PQRS is a rhombus. T is a point on line RS. $\angle PQR = 110°$ and $\angle PTR = 130°$. Find $\angle TPR$.

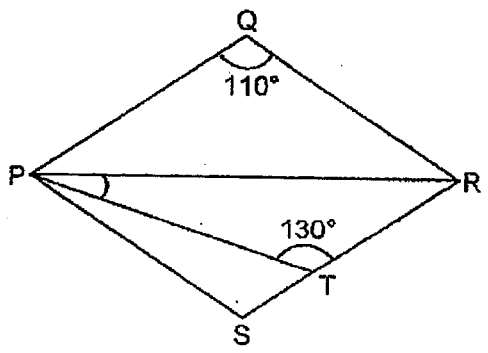

(1) 15°

(2) 17.5°

(3) 20°

(4) 35°

---

www.sgexams.com

18. Two triangles, E and F are shown in the square grid below.

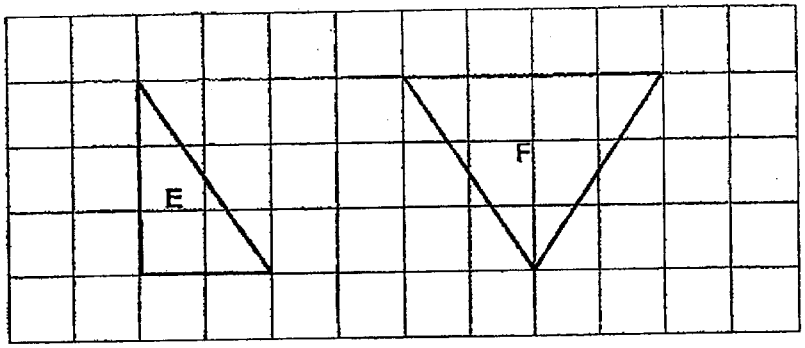

Which of the following statement(s) is/are true?

A. Triangle E is an isosceles triangle.

B. Triangle F is an equilateral triangle.

C. All the angles in Triangle F are acute angles.

(1) A only

(2) C only

(3) A and C only

(4) B and C only

END OF BOOKLET A

www.sgexams.com

CATHOLIC HIGH SCHOOL
END-OF-YEAR EXAMINATION (2025)
PRIMARY FIVE
MATHEMATICS
PAPER 1
(BOOKLET B)

Name : _____ ( )

Class : Primary 5 _____

Date : 28 October 2025

Total time for Booklet A and B : 1 h 10 min

12 questions

24 marks

Parent's signature : _____

BOOKLET A	26
BOOKLET B	24
Total Marks	50

INSTRUCTIONS TO CANDIDATES

Do not turn over this page until you are told to do so.

Follow all instructions carefully.

Answer all questions.

Write your answers in this booklet.

The use of calculators is **NOT** allowed.

This booklet consists of 9 printed pages and 1 blank page.

www.sgexams.com

Questions 19 to 30 carry 2 marks each. Show your working clearly and write your answers in the spaces provided. For questions which require units, give your answers in the units stated. All diagrams are not drawn to scale. (24 marks)

Do not write in this space

19. Find the value of $3 \div 7$. Round your answer to 2 decimal places.

Ans: _____

20. A rectangular piece of paper is 2 m long and $\frac{7}{8}$ m wide. What is the area of the piece of paper? Express your answer as a mixed number in its simplest form.

Ans: _____ m^2

www.sgexams.com

Do not write in this space

21. A piece of string is 780 cm long. It is cut into 30 equal pieces. What is the length of each smaller piece of the string in metres?

Ans: _____ m

22. In the figure below, POQ and ROS are straight lines. Find ∠UOS.

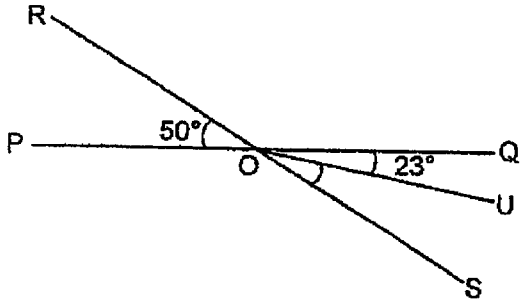

Ans: _____ °

www.sgexams.com

Do not write in this space

23. Mr Ho deposits $8200 in a bank for one year. The bank offers an interest rate of 2% per year. How much money will he have in his savings account at the end of one year?

Ans: $_____

24. The table below shows the charges for bicycle rental.

Bicycle Rental Charges	
For the first hour	$10
For every additional $\frac{1}{2}$ hour or part thereof	$2.50

Henry rented a bicycle from 2.00 p.m. to 3.45 p.m. on the same day. How much did he pay in total for the rental of a bicycle?

Ans: $_____

www.sgexams.com

Do not write in this space

25. EHJ is a straight line. ∠FHJ = 143° and ∠EHG = 62°. Find ∠FHG.

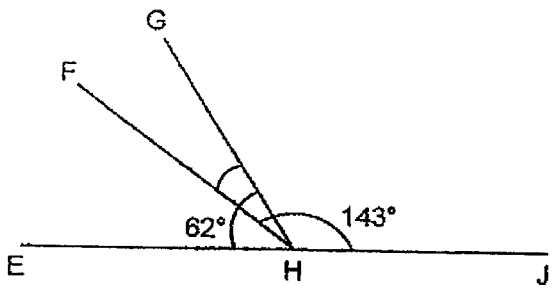

Ans: _____ °

26. Lucy had 2 m of ribbon. She used $\frac{1}{4}$ of the ribbon to tie a present. Then she used $\frac{2}{5}$ m of the ribbon to tie her hair. What was the length of the remaining ribbon? Give your answer in metres.

Ans: _____ m

www.sgexams.com

Do not write in this space

27. 7 unit cubes were stacked and glued together to form the solid below.

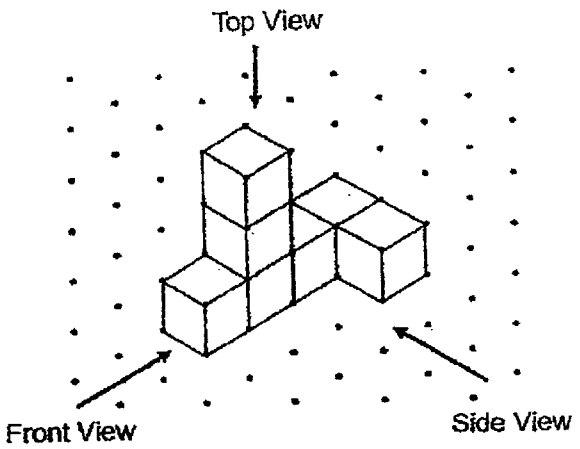

Draw the top view and the side view of the solid on the grids below.

Top view

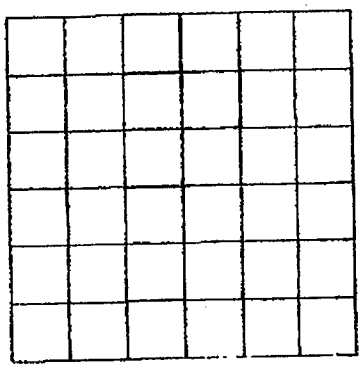

Side view

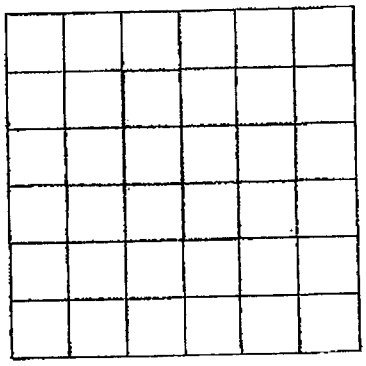

www.sgexams.com

28. On the square grid, AB and BC are straight lines. Both lines are part of a parallelogram ABCD.

Do not write in this space

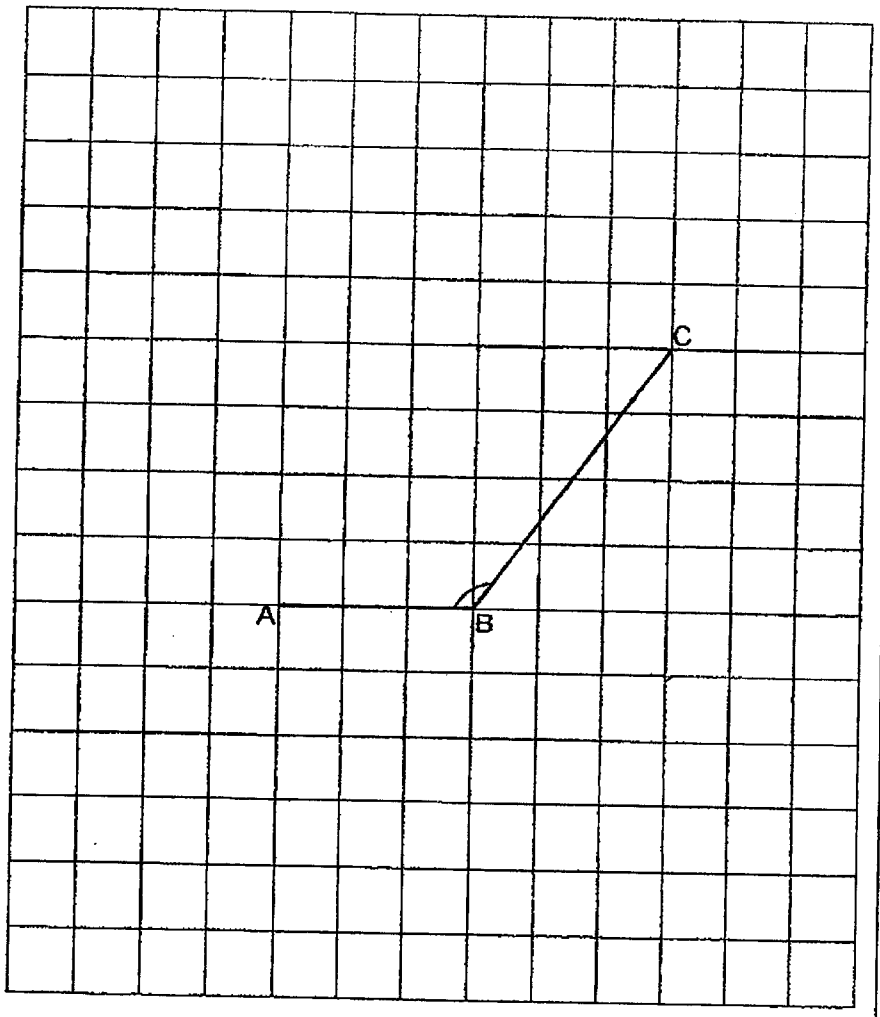

(a) Measure and write down the size of ∠ABC.

Ans: (a) _____ °

(b) Using the given lines, AB and BC, complete the drawing of the parallelogram ABCD with AB // DC and BC // AD on the square grid.

www.sgexams.com

Do not write in this space

29. Two transport companies offer discounts for their transport services. Andy, Betty and Connie used the services for their trips.

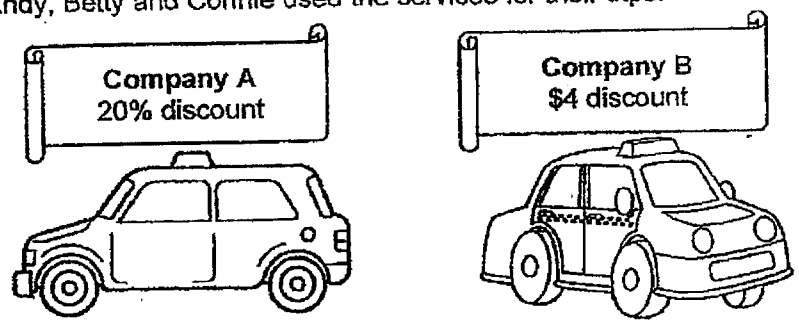

Andy paid for services from Company A for his trip while Betty paid for services from Company B for her trip. Both trips cost $10 before discount. Connie paid for services from Company B for her trip which cost $20 before discount.

Each statement below is either true, false or not possible to tell from the information given. For each statement, put a tick (✓) in the correct column.

Statement	True	False	Not possible to tell
Andy paid more than Betty for the trip after discount.			
Connie paid twice as much as Betty for her trip after discount.			

www.sgexams.com

30. ABCD is made up of 4 identical rectangles. The total area of the shaded parts is 36 cm^2. Find the total area of the unshaded parts.

Do not write in this space

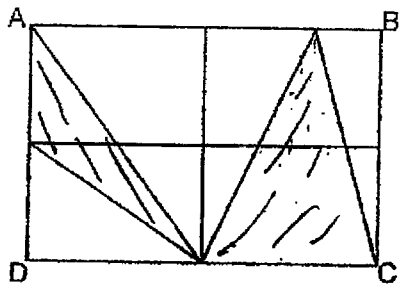

Ans: _____ cm^2

Total marks for questions 19 to 30

24

END OF BOOKLET B
END OF PAPER 1

www.sgexams.com

CATHOLIC HIGH SCHOOL

END-OF-YEAR EXAMINATION (2025)

PRIMARY FIVE

MATHEMATICS

PAPER 2

Name : _____ ( )

Class : Primary 5_____

Date : 28 October 2025

Total time : 1 h 20 min

15 questions

50 marks

Parent's signature : _____

PAPER 1 BOOKLET A	26
PAPER 1 BOOKLET B	24
PAPER 2	50
Total Marks	100

INSTRUCTIONS TO CANDIDATES

Do not turn over this page until you are told to do so.

Follow all instructions carefully.

Answer all questions.

Write your answers in this booklet.

The use of an approved calculator is expected, where appropriate.

This booklet consists of 14 printed pages.

www.sgexams.com

Questions 1 to 5 carry 2 marks each. Show your working clearly in the space below each question and write your answers in the spaces provided. For questions which require units, give your answers in the units stated. All diagrams are not drawn to scale.

(10 marks)

Do not write in this space

1. Mrs Tay had a container of flour. She used $2\frac{1}{2}$ kg of flour to bake some butter cakes. She then bought $\frac{2}{5}$ kg of flour and had $2\frac{5}{8}$ kg of flour in the end. How much flour did Mrs Tay have in the container at first?

Ans: _____ kg

2. The figure is made of 4 identical rectangles. What is the area of one such rectangle?

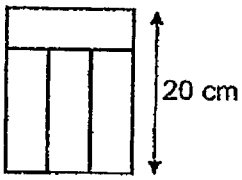

Ans: _____ cm^2

www.sgexams.com

Do not write in this space

3. PQR is an equilateral triangle. S is a point on line PR. ∠PSQ = 105°. Find ∠SQR.

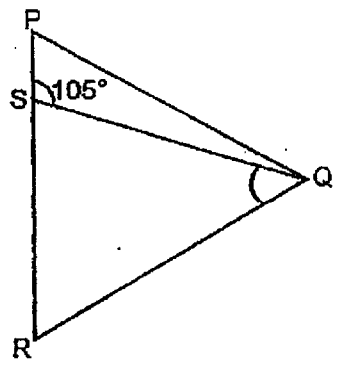

Ans: _____ °

4. Mrs Tan bought a bracelet that cost $890 before GST. How much did Mrs Tan pay for the bracelet inclusive of the 9% GST?

Ans: $ _____

www.sgexams.com

5. A rectangle is drawn in the square grid below.

Do not write in this space

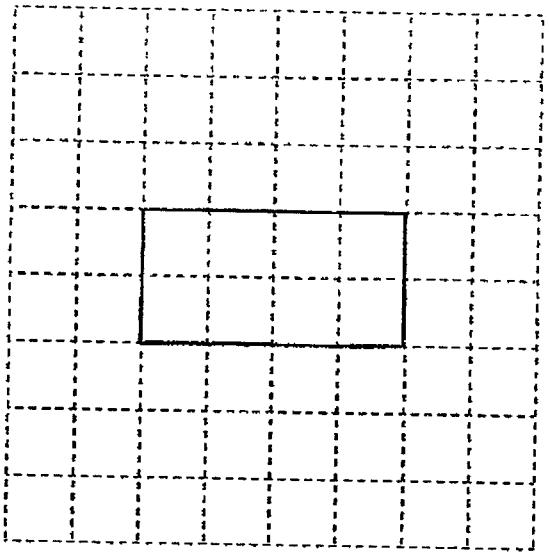

In the square grid below, draw a triangle that has the same area as the rectangle shown above. The triangle must have AB as one of its side.

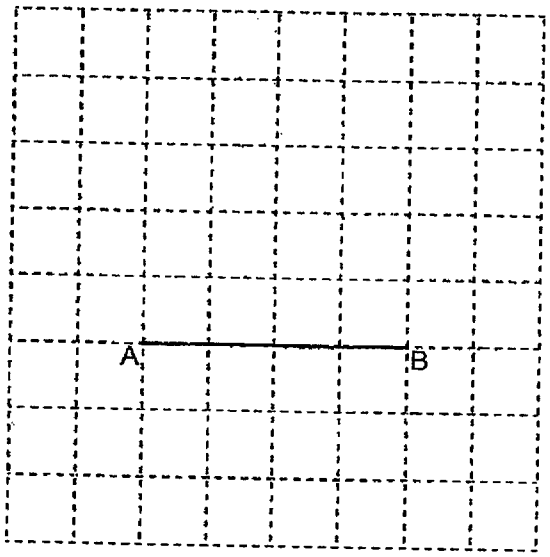

www.sgexams.com

For questions 6 to 15, show your working clearly in the space provided for each question and write your answers in the spaces provided. The number of marks available is shown in brackets [ ] at the end of each question or part-question.

(40 marks)

Do not write in this space

6. A tap was turned on at 09 00 to fill a tank. The tap was then turned off at 09 10. The tank was $\frac{5}{8}$ filled with water. The line graph shows the volume of water in the tank over 10 minutes.

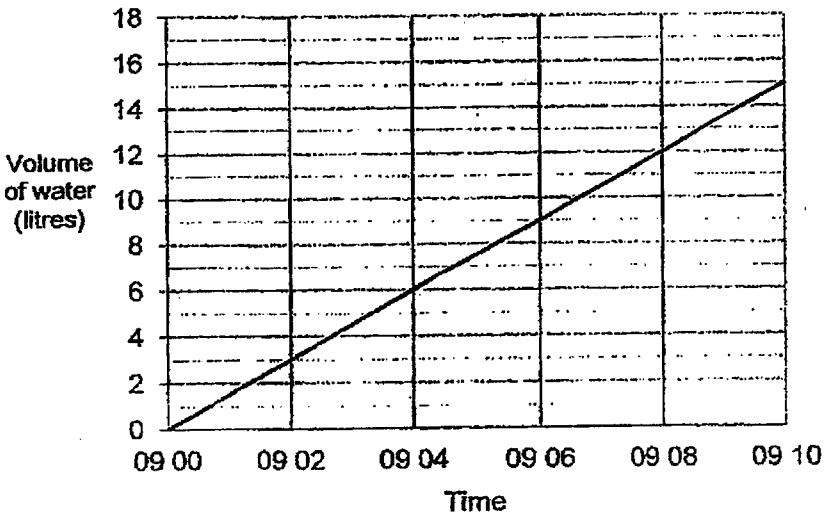

(a) What was the rate of flow of water from the tap in litres per minute?

Ans: _____ ℓ / min [1]

(b) At this rate, how many minutes would it take for the tap to fill the tank completely after 09 10?

Ans: _____ min [2]

www.sgexams.com

7. Doris paid $7.30 for 1 notebook and 3 identical staplers. Ahmad paid $15.90 for 3 such notebooks and 5 such staplers. What was the cost of 1 such stapler?

Do not write in this space

Ans: $ _____ [3]

www.sgexams.com

8. Darryl had 34 more marbles than Hanson at first. After Hanson gave 112 marbles to Darryl, Darryl had three times as many marbles as Hanson. How many marbles did Darryl have at first?

Do not write in this space

Ans: _____ [3]

www.sgexams.com

Do not write in this space

9. A rectangular tank measuring 15 cm by 8 cm by 25 cm was $\frac{5}{6}$ filled with water as shown below. The water in the tank was then poured into as many identical beakers as possible. The capacity of each beaker was 245 ml and each beaker was filled with water completely. Some water was left in the tank in the end.

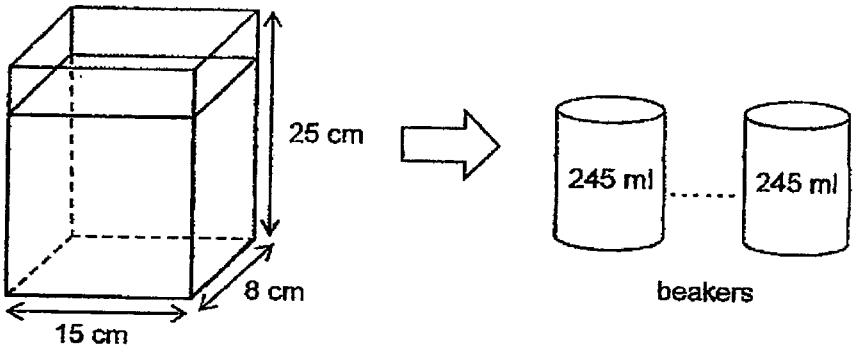

rectangular tank

(a) What was the greatest number of beakers that were completely filled with water?

Ans: (a) _____ [3]

(b) How much water was left in the tank in the end? Give your answer in litres.

Ans: (b) _____ ℓ [1]

www.sgexams.com

10. Ally and Bryan had the same number of stickers at first. When Ally gave away $\frac{1}{3}$ of her stickers and Bryan gave away $\frac{3}{5}$ of his stickers, Bryan had 76 fewer stickers than Ally. How many stickers did each of them have at first?

Do not write in this space

Ans: _____ [4]

www.sgexams.com

Do not write in this space

11. ABCD is a parallelogram. E is a point on line AB.

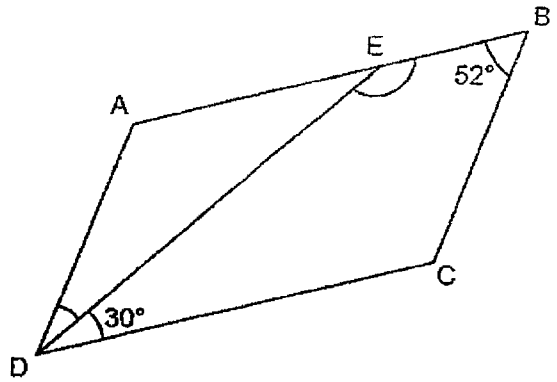

(a) Find ∠ADE.

Ans: (a)_____° [2]

(b) Find ∠DEB.

Ans: (b)_____° [2]

www.sgexams.com

Do not write in this space

12. Susie had a total of 42 twenty-cent and one-dollar coins. She used some of the coins to buy 4 books at $4 each and had $14.80 left.

(a) How much money did Susie have at first?

Ans: (a) $_____ [2]

(b) How many one-dollar coins did Susie have at first?

Ans: (b) _____ [3]

www.sgexams.com

13. There were twice as many children as adults at a carnival. Each child was given 5 game coupons and each adult was given 3 game coupons. 679 more game coupons were given to the children than to the adults. How many children were there at the carnival?

Do not write in this space

Ans: _____ [4]

www.sgexams.com

Do not write in this space

14. Shaded squares and unshaded squares are used to form the following pattern. The first four figures of the pattern are shown below.

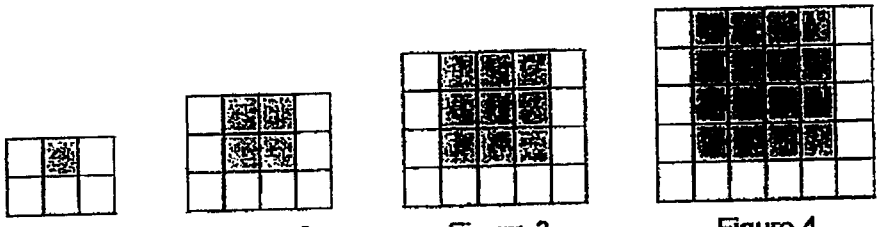

Figure 1 Figure 2 Figure 3 Figure 4

The table below shows the number of shaded squares and unshaded squares used for each figure.

Figure Number	Number of shaded squares	Number of unshaded squares
1	1	5
2	4	8
3	9	11
4	16	14
5		

[1]

(a) Complete the table for Figure 5.

(b) How many shaded squares are used to form the pattern for Figure 12?

Ans: (b)_____ [2]

(c) A figure in the pattern has 65 unshaded squares. What is the figure number?

Ans: (c)_____ [2]

www.sgexams.com

Do not write in this space

15. A total of 1474 adults and children participated in a carnival run. $\frac{3}{5}$ of the male participants were boys and $\frac{1}{2}$ of the female participants were girls. There was an equal number of boys and girls.

(a) How many boys participated in the run?

Ans: (a)_____ [3]

(b) 144 women did not complete the run. How many adults completed the run altogether?

Ans: (b)_____ [2]

END OF PAPER 2

www.sgexams.com

www.sgexams.com

YEAR : 2025
LEVEL : PRIMARY 5
SCHOOL : CATHOLIC HIGH SCHOOL
SUBJECT : MATHEMATICS
TERM : END-OF-YEAR EXAMINATION

BOOKLET A

Q1	1	Q2	3	Q3	2	Q4	4	Q5	1
Q6	2	Q7	4	Q8	1	Q9	3	Q10	4
Q11	4	Q12	1	Q13	3	Q14	1	Q15	2
Q16	3	Q17	1	Q18	2				

BOOKLET B

Q19	0.43	Q20	$\frac{7}{8}+\frac{7}{8}=\frac{14}{8}$ $=1\frac{3}{4}$
Q21	780 ÷ 30 = 780 ÷3 ÷10 =78 ÷ 3 = 26 26cm = 0.26m	Q22	<UOS = 50° -23° = 27°
Q23	$\frac{102}{100}$ x 8200 = $8364	Q24	10 + 2.5 + 2.5 = $15
Q25	180° - 143° = 37° 180° - 62° = 118° 180° - 118° - 37° = 25°	Q26	$\frac{1}{4}$ x 2u = $\frac{1}{4}$ x $\frac{2}{1}$ = $\frac{1}{2}$ $2-\frac{1}{2}-\frac{2}{5}=1\frac{1}{10}-\frac{5}{10}-\frac{4}{10}=1\frac{1}{10}$ m
Q27	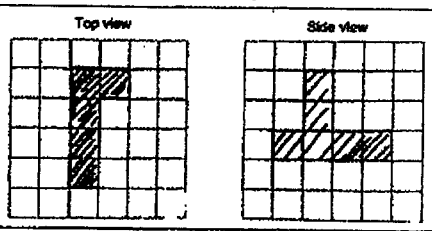	Q28	a) a) 126° b) 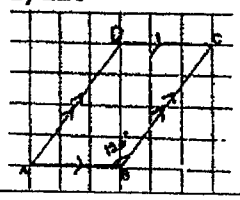
Q29	Statement / True / False / Not possible to tell Andy paid more than Betty for the trip after discount: ✓ Connie paid twice as much as Betty for her trip after discount.: ✓	Q30	3u = 36 1u = 36 ÷ 3 = 12 5u = 12 x 5 = 60cm^2

www.sgexams.com

Paper 2

Q1	$2\frac{5}{8} - \frac{2}{5} = 2\frac{25}{40} - \frac{16}{40} = 2\frac{9}{40}$ $2\frac{9}{40} + 2\frac{1}{2} = 2\frac{9}{40} + 2\frac{20}{40} = 4\frac{29}{40}$ kg	Q2	4u = 20 1u = 20 ÷ 4 = 5 3u = 5 x 3 = 15 15 x 5 = 75cm^2
Q3	<PQS = 180° - 105° - 60° = 15° <SQP = 60° - 15° = 45°	Q4	$\frac{109}{100}$ x 890 = \$970.10
Q5	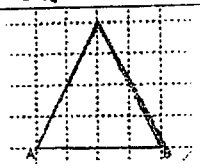	Q6	a) 1.5λ / min b) 5u = 15 1u= 15 ÷5 = 3 3u = 3 x 3 = 9 ANS : 6min
Q7	7.3 x 3 = 21.9 4s = 21.9 – 15.9 = 6 1s = 6 ÷ 4 = \$1.50	Q8	2u = 112 x 2 + 34 = 258 1u = 258 ÷ 2 = 129 3u = 129 x 3 = 387 387 – 112 = 275
Q9	a) $\frac{5}{6}$ x 25 = $20\frac{5}{6}$ $20\frac{5}{6}$ x 8 x 15 = 2500 2500 ÷ 245 = 10R50 ANS : 10 b) 50ml = 0.050L	Q10	10u – 6u = 4u 4u = 76 1u = 76 ÷ 4 = 19 15u = 19 x 15 = 285
Q11	a) <ADE = 52° - 30° = 22° b) 180° - 52° = 128° <DEB= 360°- 52° - 30° -128 = 150°	Q12	a) 4 x 4 = 16 16 + 14.8 = \$30.8 b) 42 x 0.2 = 8.4 30.8 – 8.4 = 22.4 22.4 ÷ 0.8 = 28
Q13	5 + 5 = 10 10 – 3 = 7 679 ÷ 7 = 97 97 x 2 = 194	Q14	a) z Figure number: 5; Number of shaded squares: 25; Number of unshaded squares: 17 b) 12 x 12 = 144 c) 65 – 20 = 45 45 ÷ 3 = 15 15 + 6 = 21
Q15	a) 11u = 1474 1u = 1474 ÷ 11 = 134 3u = 134 x 3 = 402 b) 5u = 134 x 5 = 670 670 – 144 = 526		

2

END